Technical Data

Specification & Capacities

MPK50

12,0kW/16,1Hp

2,8-6,9m

5000kg

EN 13000

Via Campardone, 1
31014 Colle Umberto – Italy
Tel. +39 0438 1710083
Mail: info@jekko.it
Web: www.jekko.it

Date	Oct 11th 2016
REV.	Rev. 5

MPK50 – OVERALL DIMENSIONS

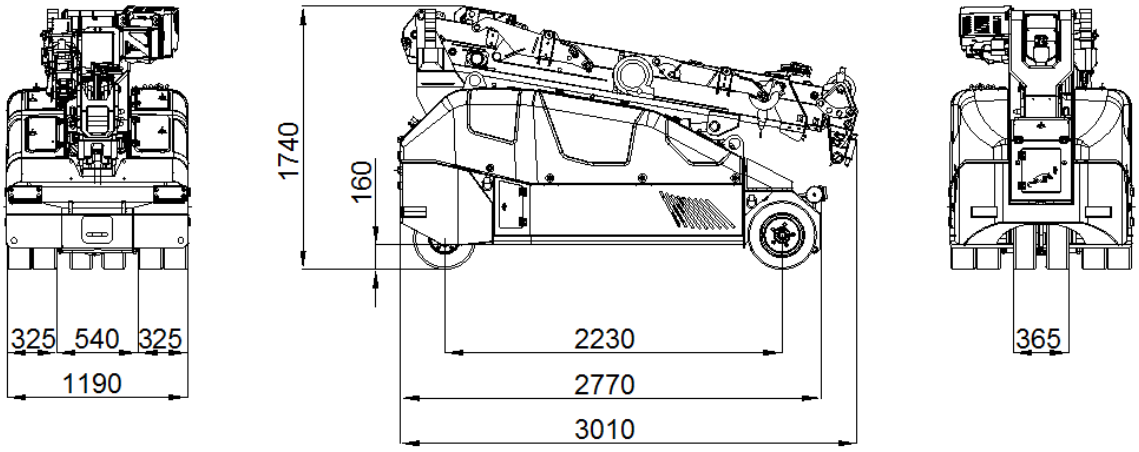

MPK50 - Stabilizing bar

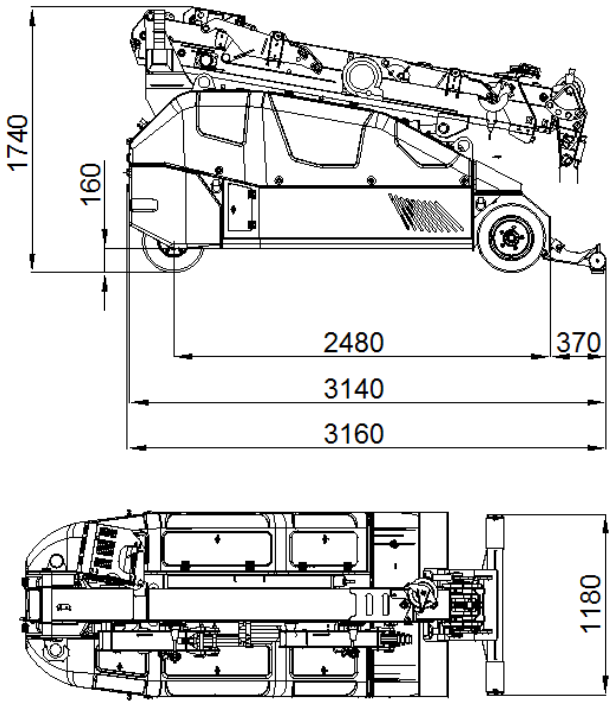

MPK50 – Boom movement

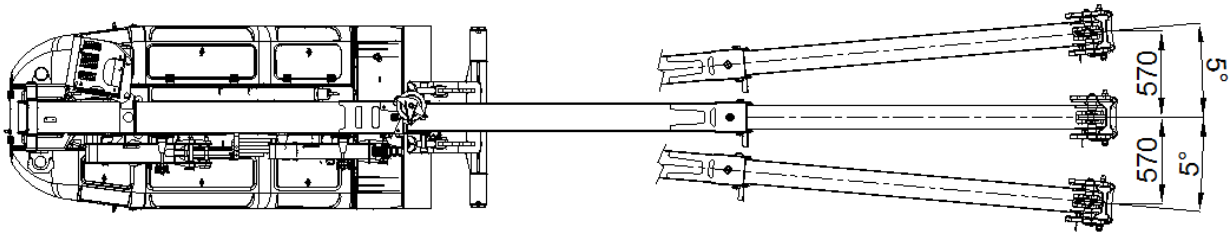

MPK50 – Turning radius

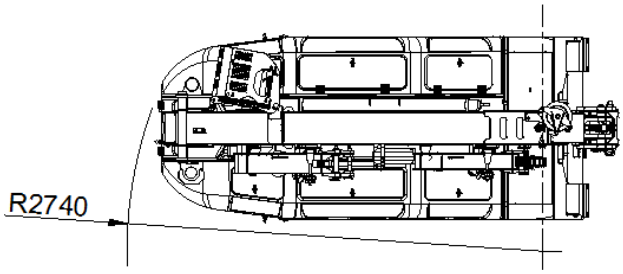

		kg
		3450
		1000
	Tot.	**4450**

	48V 620 Ah	kW	12,0kW 16,1Hp

	km/h	4,0
	20%	

	-10°/65°		25 sec
	m	2,8 - 6,9	25 sec

Reaction on wheel (double wheel base)

KG	kg	0
	kg	2600
	kg	1850
TOTAL	kg	4450

HOIST PERFORMANCE

Layer	Max Line Pull	Normal Line Speed	High Line Speed
	kg	m/min	m/min
1	1.491 (*)	34,4	N/A
2	1.377 (*)	37,5	N/A
3	1.281 (*)	40,6	N/A
4	1.172 (*)	42,8	N/A
5	1.100(*)	45,1	N/A

(*) 1000kg LMI limited

Wire Rope	Diameter	Tot. Length	Max Load
	mm	m	kg
19x7 right lang lay Non rotating	8	60	5.435

HOOK BLOCK

LOAD	No. of	
kg	Sheaves	Lines
5.000	3	5
4.000	2	4
3.000	2	3
2.000	1	2
1.000		1

BOOM HEAD CONFIGURATIONS

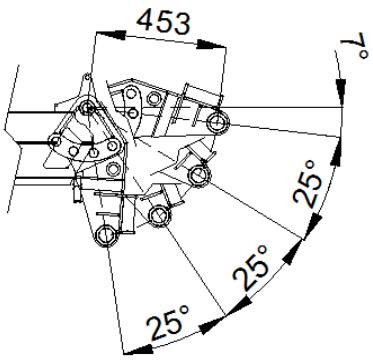

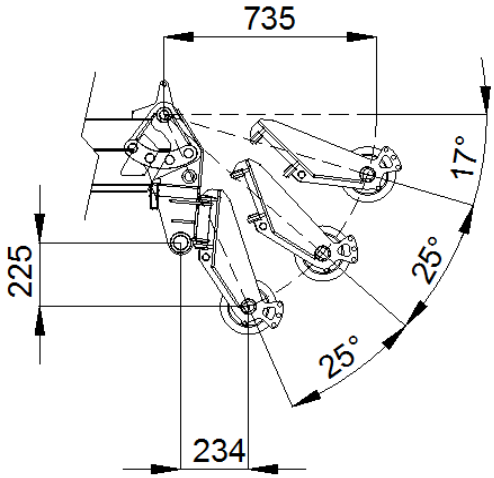

MPK50 MAIN BOOM Hook Wheels

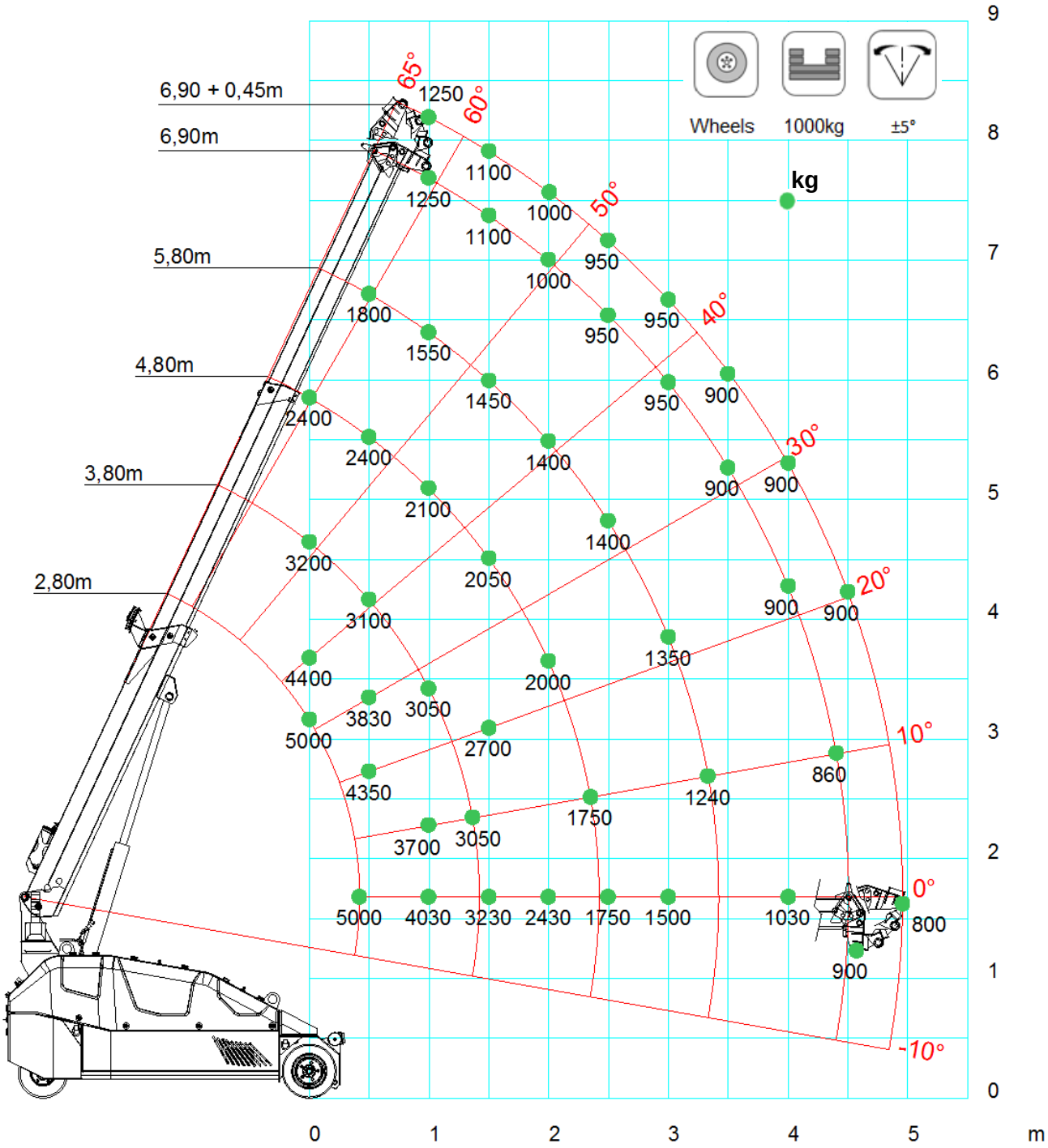

	HOOK	Wheels	1000kg	±5°	EN
	2,8	3,8	4,8	5,8	6,9
0,0	5000	3200	2400		
0,5	5000	3100	2400	1800	
1,0		3050	2100	1550	1250
1,5		3050	2050	1450	1100
2,0			2000	1400	1000
2,5			1750	1400	950
3,0				1350	950
3,5				1200	900
4,0					900
4,5					900
4,9					800

LCMPK50_V102_0616_MAIN_A1_G_CW_1000_WHEEL

	HOOK	Wheels	0kg	±5°	EN
	2,8	3,8	4,8	5,8	6,9
0,0	4500	2700	2050		
0,5	4000	2500	1900	1400	
1,0		2200	1600	1300	1175
1,5		1700	1400	1200	1025
2,0			1200	1100	975
2,5			900	850	850
3,0				760	700
3,5				620	600
4,0					500
4,9					450

LCMPK50_V102_0616_MAIN_A1_G_CW_0_WHEEL

MPK50 MAIN BOOM Hook
Stabilizing bar

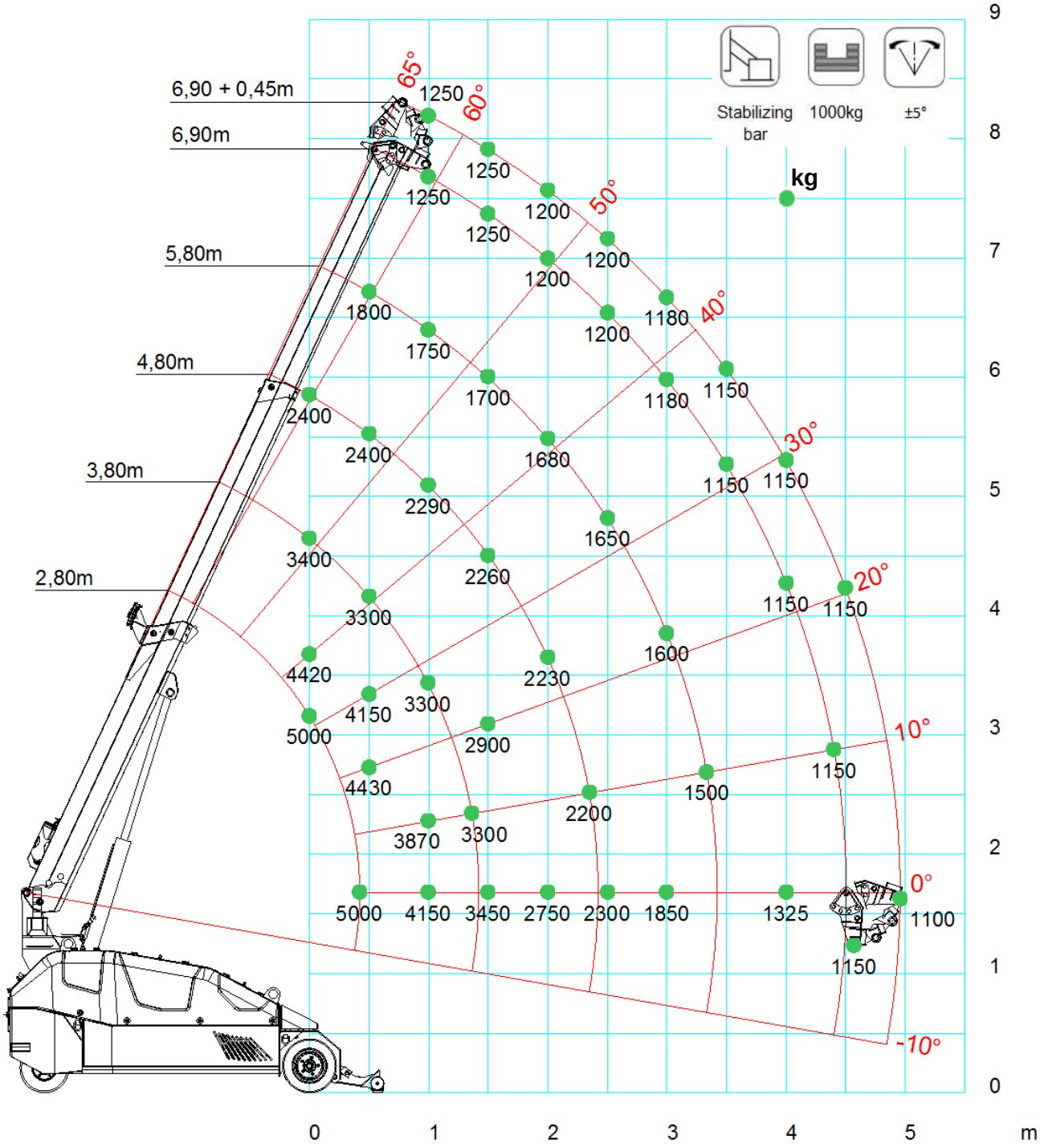

	HOOK	Stabilizing bar	1000kg	±5°	EN
	2,8	3,8	4,8	5,8	6,9
0,0	5000	3400	2400		
0,5	5000	3300	2400	1800	
1,0		3300	2290	1750	1250
1,5		3300	2260	1700	1250
2,0			2230	1680	1200
2,5			2200	1650	1200
3,0				1600	1180
3,5				1500	1150
4,0					1150
4,5					1150
4,9					1100

LCMPK50_V102_0616_MAIN_A1_G_CW_1000_BAR

	HOOK	Stabilizing bar	0kg	±5°	EN
	2,8	3,8	4,8	5,8	6,9
0,0	5000	3000	2220		
0,5	4500	2900	2150	1600	
1,0		2750	1950	1500	1190
1,5		2500	1830	1450	1150
2,0			1700	1380	1115
2,5			1550	1250	1050
3,0				1180	975
3,5				1050	900
4,0					850
4,9					800

LCMPK50_V102_0616_MAIN_A1_G_CW_0_BAR

MPK50 MAIN BOOM Winch Wheels

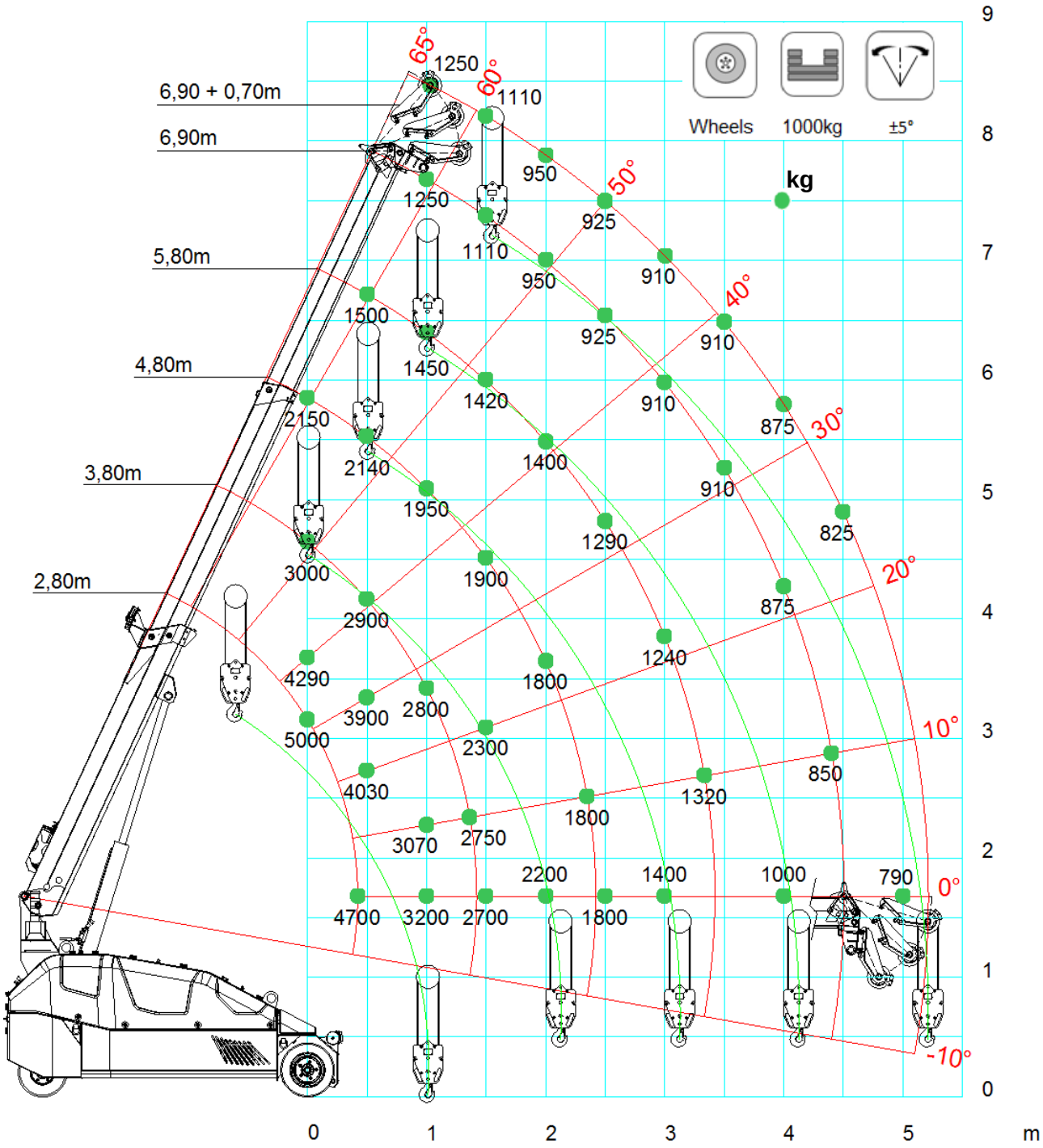

	WINCH	Wheels	1000kg	±5°	EN
	2,8	3,8	4,8	5,8	6,9
0,0	5000	2980	2140		
0,5	4700	2900	2140	1500	
1,0		2820	1940	1440	1250
1,5		2780	1900	1420	1110
2,0			1800	1400	950
2,5			1610	1290	925
3,0				1240	910
3,5				1160	910
4,0					875
4,5					825
4,9					800

LCMPK50_V102_0616_MAIN_A1_F_CW_1000_WHEEL

	WINCH	Wheels	0kg	±5°	EN
	2,8	3,8	4,8	5,8	6,9
0,0	4500	2540	1780		
0,5	3500	2340	1780	1440	
1,0		2080	1600	1340	1025
1,5		1660	1460	1240	925
2,0			1160	960	775
2,5			880	830	710
3,0				680	560
3,5				580	500
4,0					455
4,5					425
4,9					400

LCMPK50_V102_0616_MAIN_A1_F_CW_0_WHEEL

MPK50 MAIN BOOM Winch
Stabilizing bar

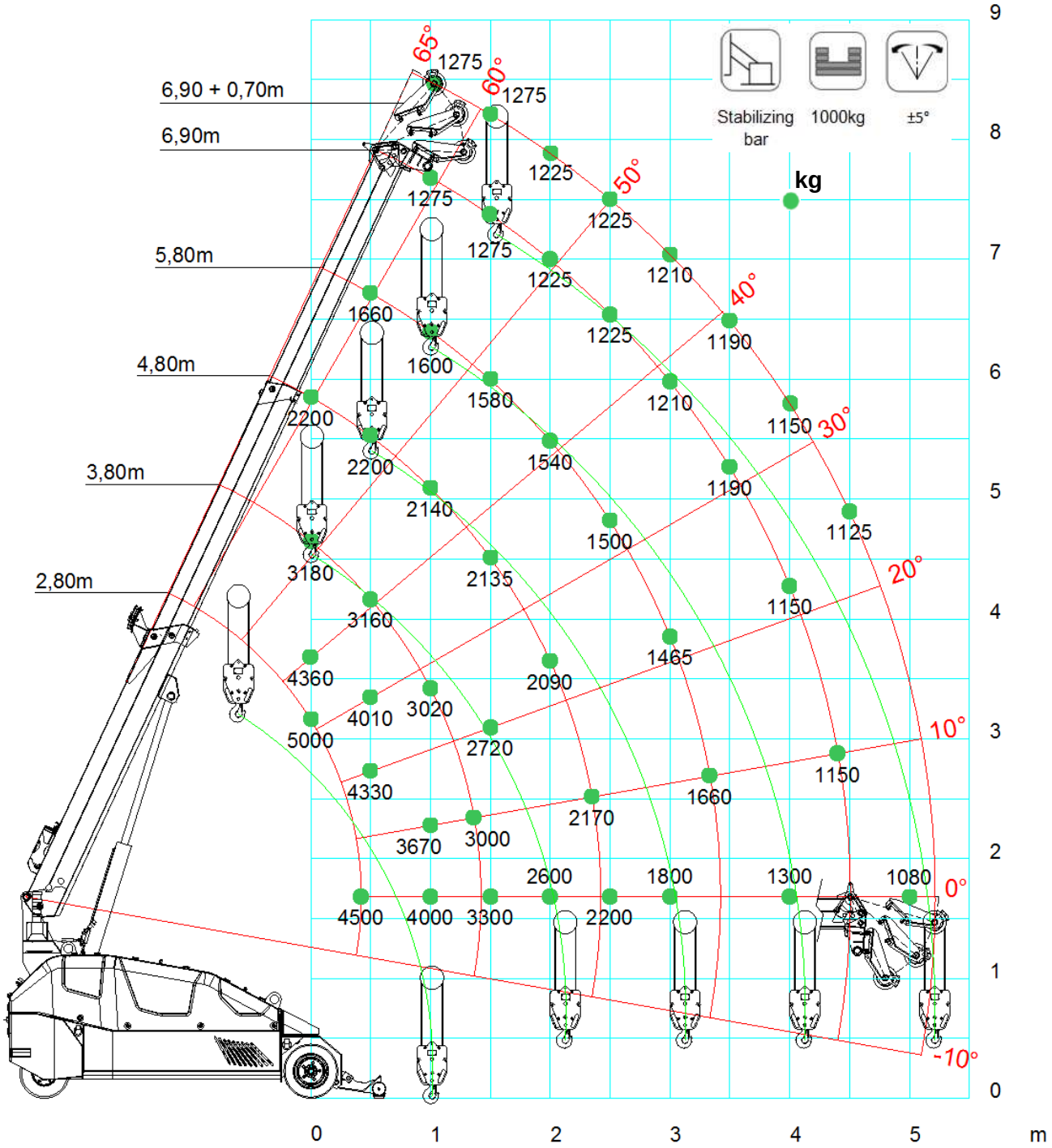

	WINCH	Stabilizing bar	1000kg	±5°	EN
	2,8	3,8	4,8	5,8	6,9
0,0	5000	3180	2200		
0,5	4500	3160	2200	1660	
1,0		3020	2140	1600	1275
1,5		3020	2135	1580	1275
2,0			2090	1540	1225
2,5			2040	1500	1225
3,0				1465	1210
3,5				1430	1190
4,0					1150
4,5					1125
4,9					1100

LCMPK50_V102_0616_MAIN_A1_F_CW_1000_BAR

	WINCH	Stabilizing bar	0kg	±5°	EN
	2,8	3,8	4,8	5,8	6,9
0,0	4750	2860	1990		
0,5	4000	2720	1990	1640	
1,0		2550	1870	1470	1250
1,5		2340	1795	1400	1075
2,0			1600	1235	1010
2,5			1450	1150	960
3,0				1060	885
3,5				1000	825
4,0					800
4,5					775
4,9					750

LCMPK50_V102_0616_MAIN_A1_F_CW_0_BAR

MPK50 JIB1800-700.2M Short Wheels

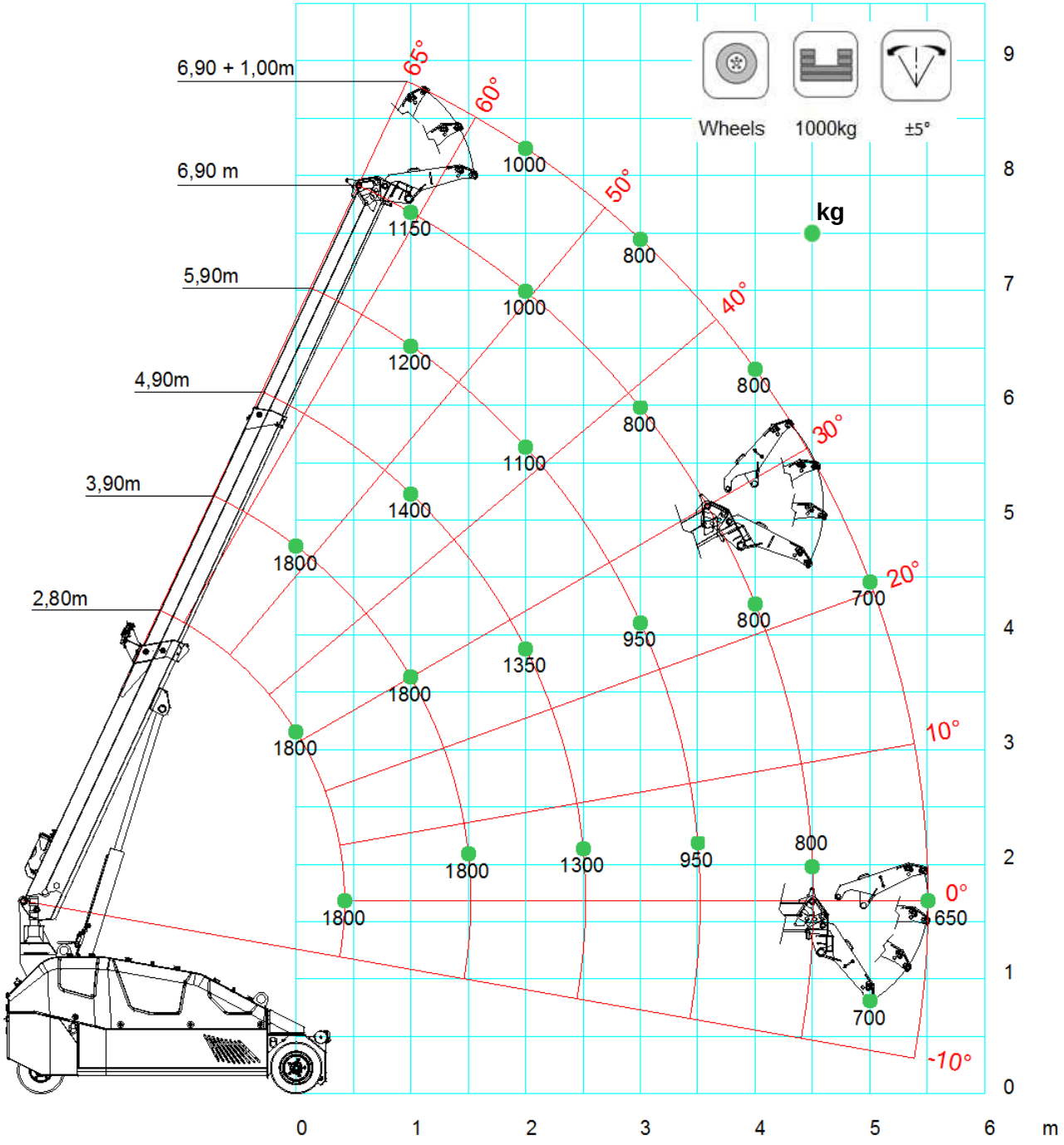

	SHORT	Wheels	1000kg	±5°	EN
	2,8	3,9	4,9	5,9	6,9
0,0	1800	1800			
0,5	1800	1800	1400	1200	
1,0	1800	1800	1400	1200	1150
1,5		1800	1400	1150	1100
2,0		1800	1350	1100	1000
2,5		1800	1300	1000	850
3,0			1250	950	800
3,5			1230	950	800
4,0				900	800
4,5				900	800
5,0					700
5,5					650

LCMPK50_V102_0616_JIB1800_A1_G_CW_1000_WHEEL

	SHORT	Wheels	0kg	±5°	EN
	2,8	3,9	4,9	5,9	6,9
0,0	1800	1500			
0,5	1800	1500	1200	900	
1,0	1800	1400	1200	900	700
1,5		1300	1100	800	700
2,0		1100	950	800	600
2,5		950	800	700	550
3,0			700	600	500
3,5			600	550	450
4,0				500	420
4,5				400	400
5,0					380
5,5					300

LCMPK50_V102_0616_JIB1800_A1_G_CW_0_WHEEL

MPK50 JIB1800-700.2M Short
Stabilizing bar

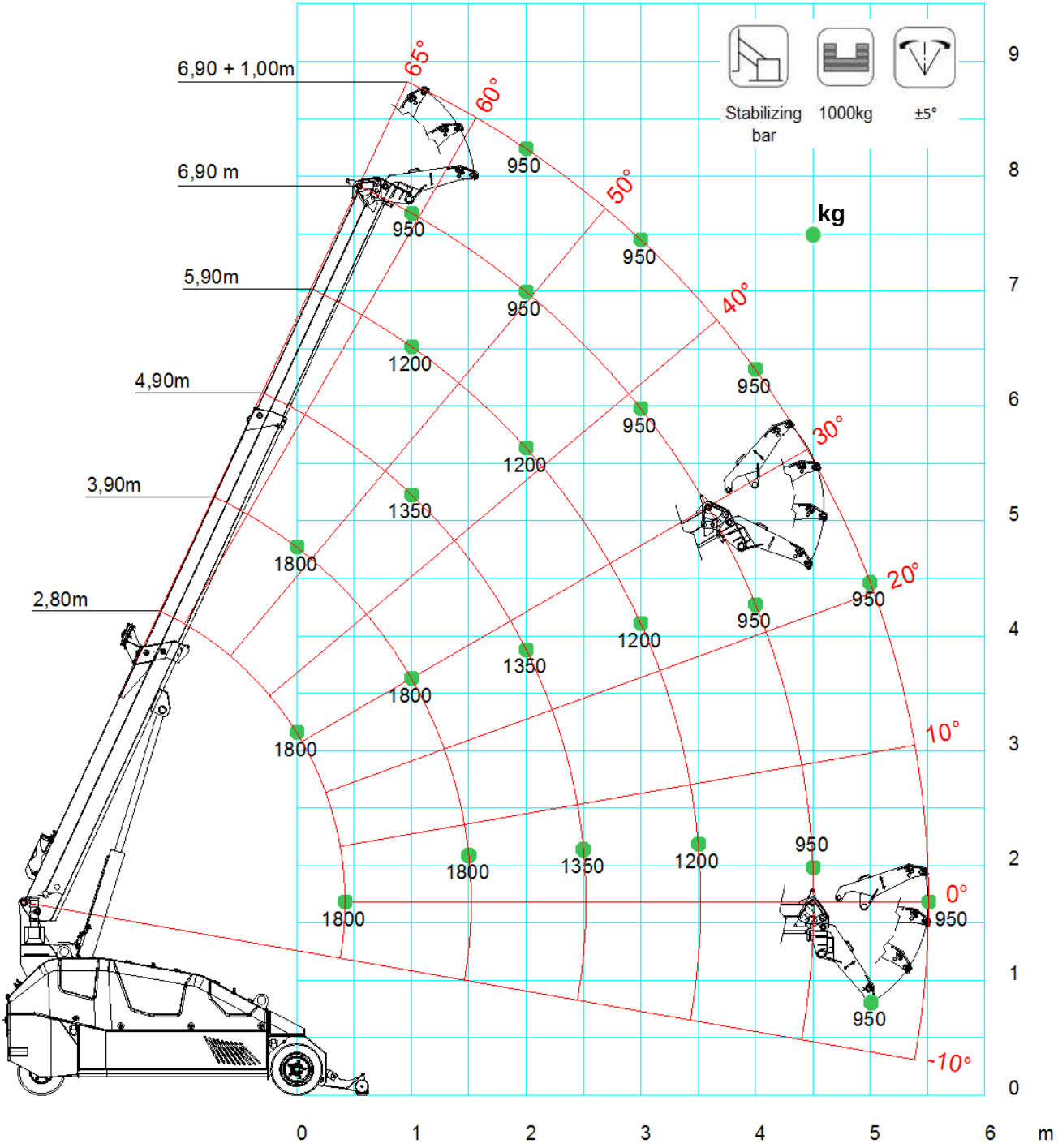

R	SHORT	Stabilizing bar	1000kg	±5°	EN
	2,8	3,9	4,9	5,9	6,9
0,0	1800	1800			
0,5	1800	1800	1350	1200	
1,0	1800	1800	1350	1200	950
1,5		1800	1350	1200	950
2,0		1800	1350	1200	950
2,5		1800	1350	1200	950
3,0			1350	1200	950
3,5			1350	1200	950
4,0				1200	950
4,5				1200	950
5,0					950
5,5					950

LCMPK50_V102_0616_JIB1800_A1_G_CW_1000_BAR

R	SHORT	Stabilizing bar	0kg	±5°	EN
	2,8	3,9	4,9	5,9	6,9
0,0	1800	1650			
0,5	1800	1650	1275	1050	
1,0	1800	1600	1275	1050	825
1,5		1550	1225	1000	825
2,0		1450	1150	1000	775
2,5		1400	1075	950	750
3,0			1025	900	725
3,5			950	875	700
4,0				850	685
4,5				800	650
5,0					600
5,5					550

LCMPK50_V102_0616_JIB1800_A1_G_CW_0_BAR

MPK50 JIB1800-700.2M Long Wheels

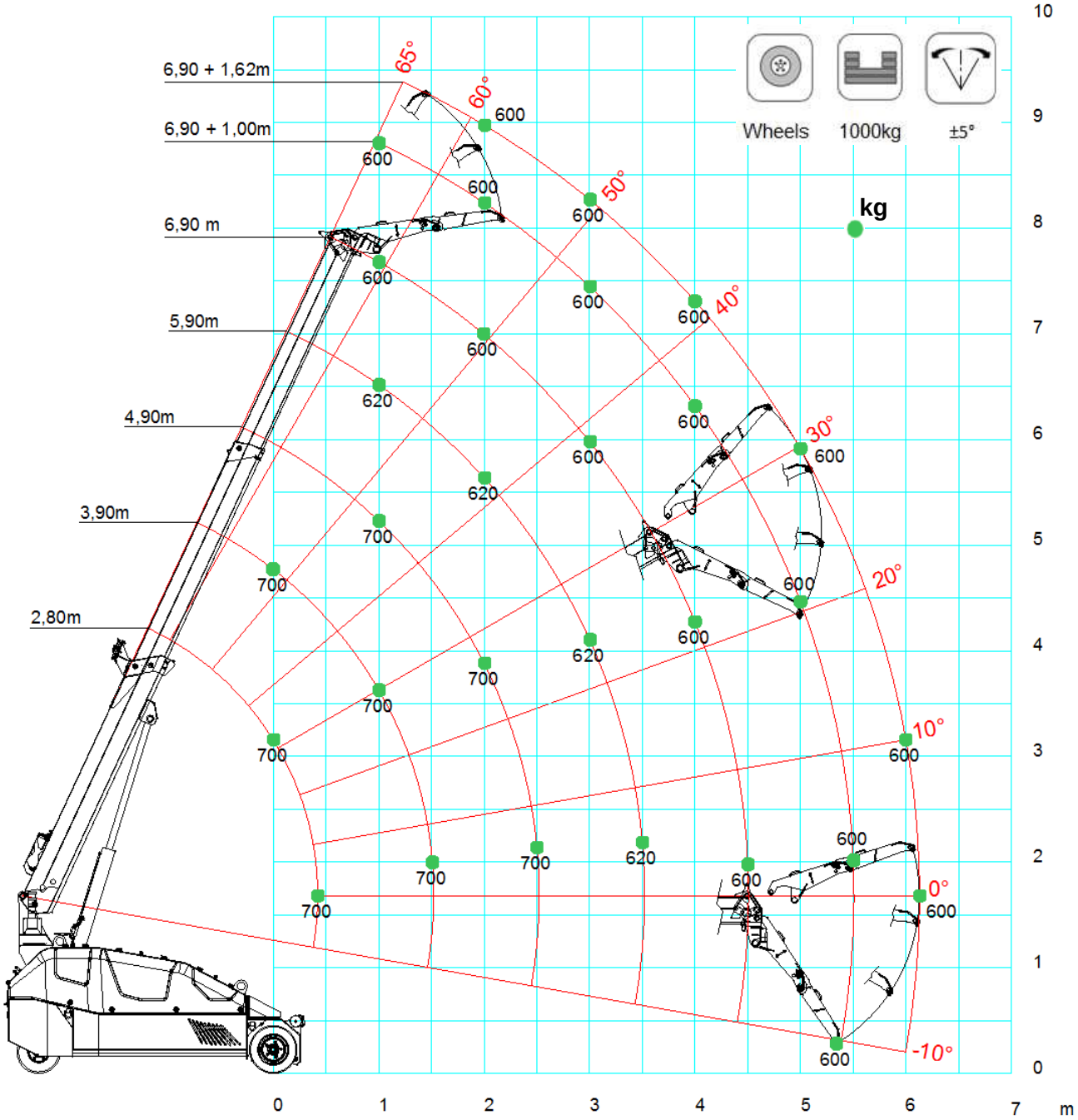

	LONG	Wheels	1000kg	±5°	EN
	2,8	3,9	4,9	5,9	6,9
0,0	700				
0,5	700	700			
1,0	700	700	700		
1,5	700	700	700	620	600
2,0	700	700	700	620	600
2,5		700	700	620	600
3,0		700	700	620	600
3,5			700	620	600
4,0			650	620	600
4,5				620	600
5,0				620	600
5,5					600
6,1					600

LCMPK50_V102_0616_JIB700_A1_G_CW_1000_WHEEL

	LONG	Wheels	0kg	±5°	EN
	2,8	3,9	4,9	5,9	6,9
0,0	700				
0,5	700	700			
1,0	700	700	700		
1,5		700	700	600	500
2,0		700	700	600	500
2,5		700	700	500	450
3,0		700	700	500	450
3,5			600	500	450
4,0			500	500	400
4,5				400	400
5,0				350	350
5,5					300
6,1					200

LCMPK50_V102_0616_JIB700_A1_G_CW_0_WHEEL

MPK50 JIB1800-700.2M Long Stabilizing bar

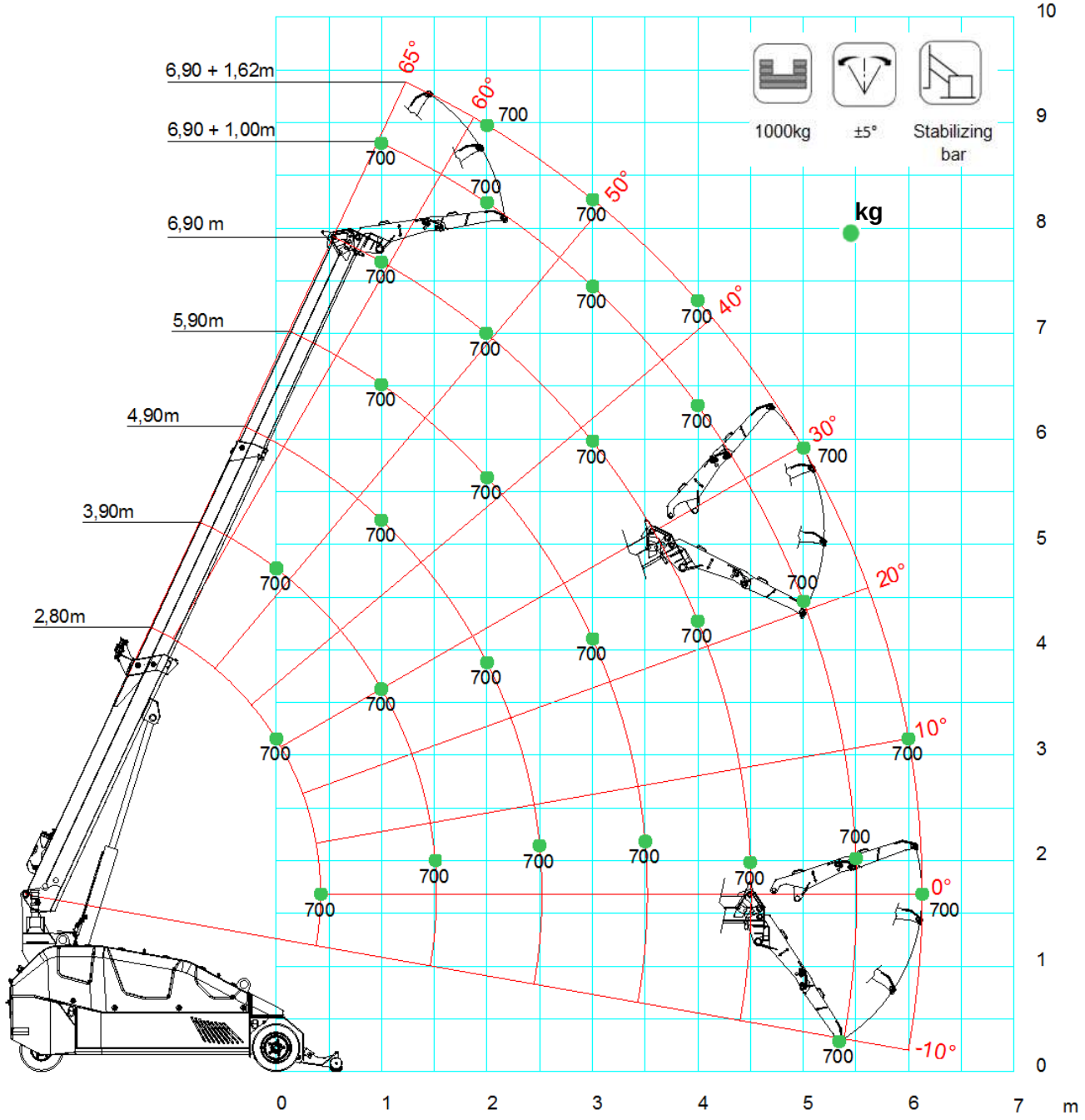

	LONG	Stabilizing bar	1000kg	±5°	EN
	2,8	3,9	4,9	5,9	6,9
0,0	700				
0,5	700	700			
1,0	700	700	700		
1,5	700	700	700	700	700
2,0	700	700	700	700	700
2,5		700	700	700	700
3,0		700	700	700	700
3,5			700	700	700
4,0			700	700	700
4,5				700	700
5,0				700	700
5,5					700
6,1					700

LCMPK50_V102_0616_JIB700_A1_G_CW_1000_BAR

	LONG	Stabilizing bar	0kg	±5°	EN
	2,8	3,9	4,9	5,9	6,9
0,0	700				
0,5	700	700			
1,0	700	700	700		
1,5		700	700	600	500
2,0		700	700	600	500
2,5		700	700	600	500
3,0		700	700	550	500
3,5			700	550	500
4,0			650	550	500
4,5				550	500
5,0				500	500
5,5					500
6,1					450

LCMPK50_V102_0616_JIB700_A1_G_CW_0_BAR

ACCESSORIES

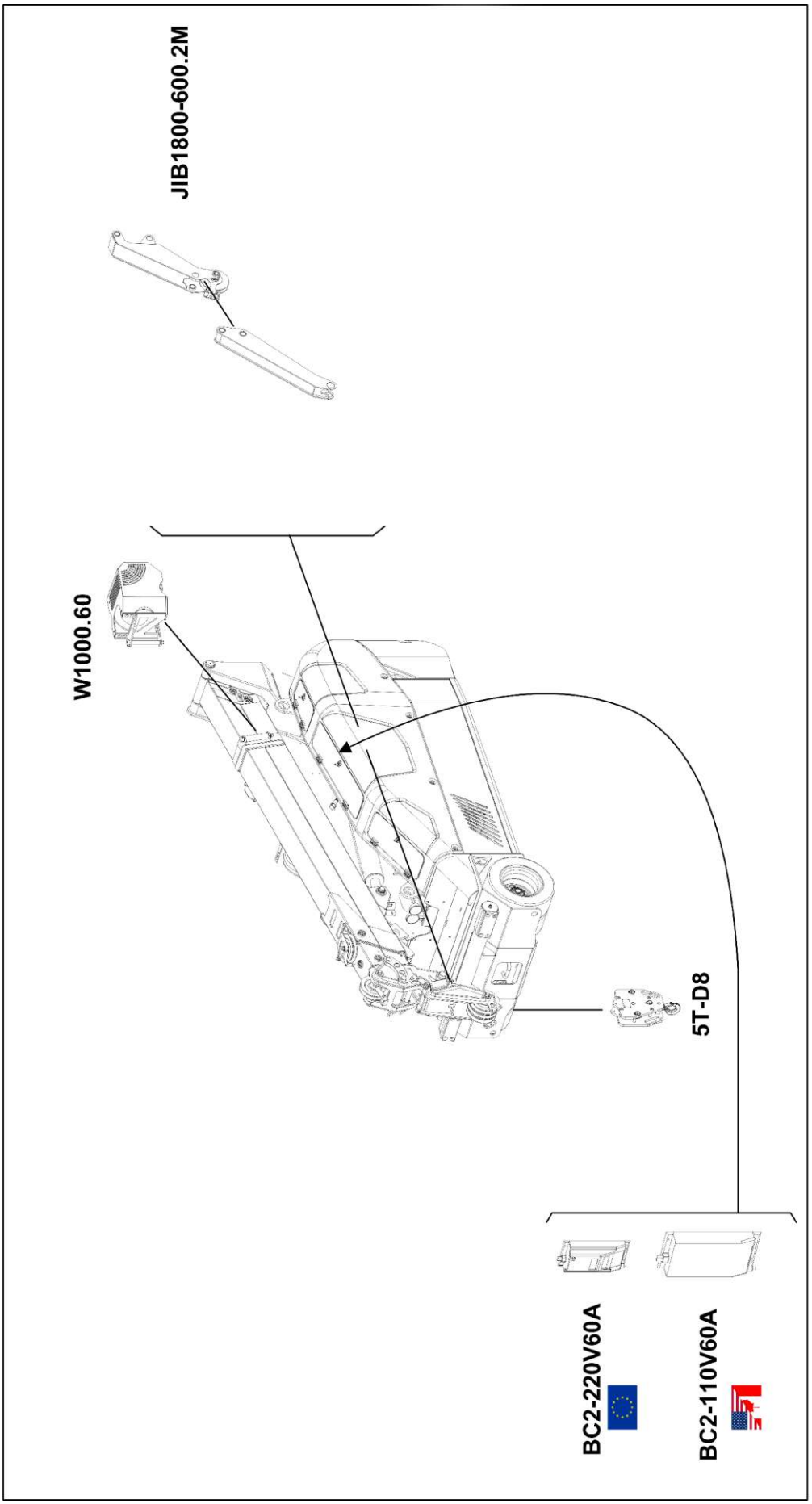

	STD	PC-01	PC-11
Boom, Covers & Outriggers	RAL2004	RAL____	RAL____
Chassis, Frames & Tanks	RAL7001	RAL7001	RAL____

ACCESSORIES FEATURES

JIB1800-700.2M
Short configuration

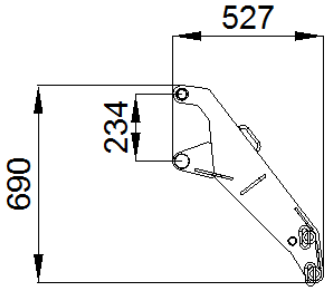

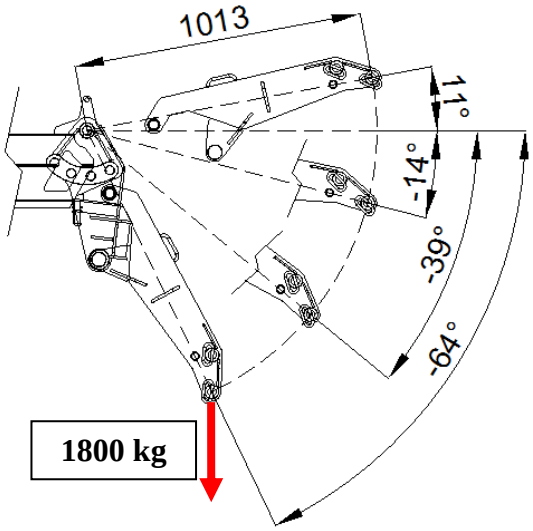

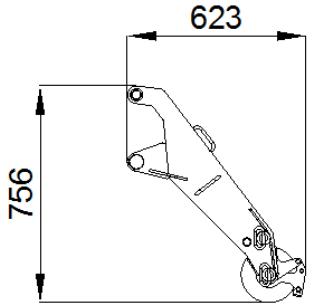

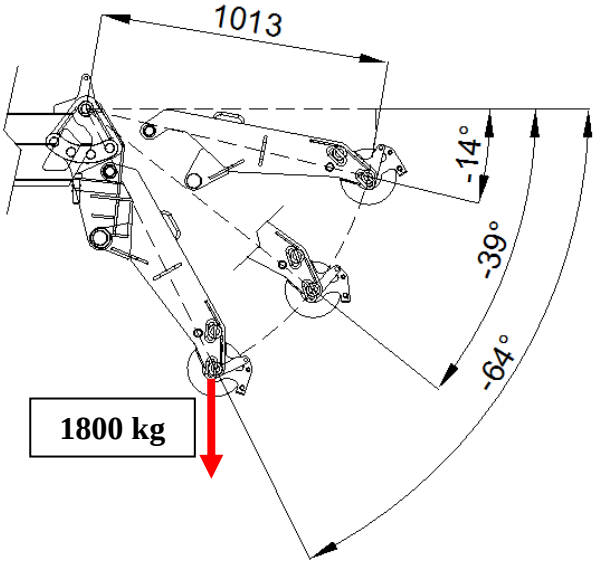

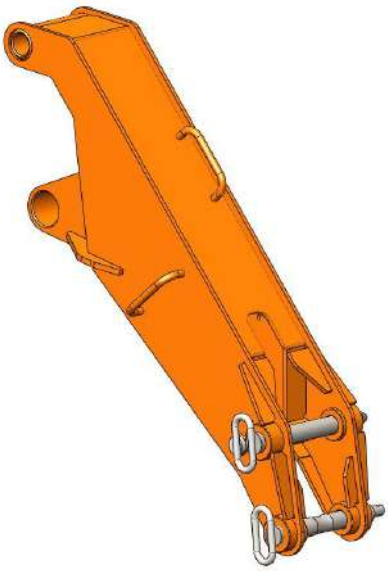

	kg
	30

JIB1800-700.2M
Long configuration

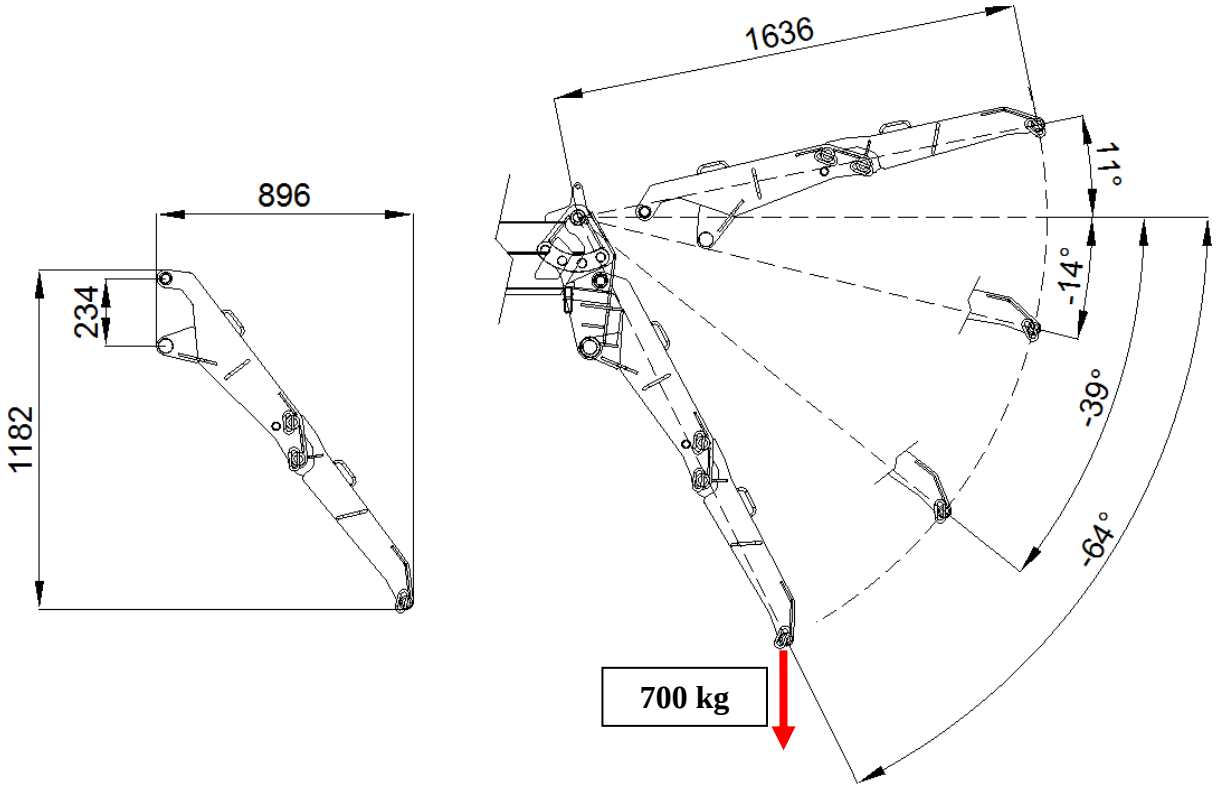

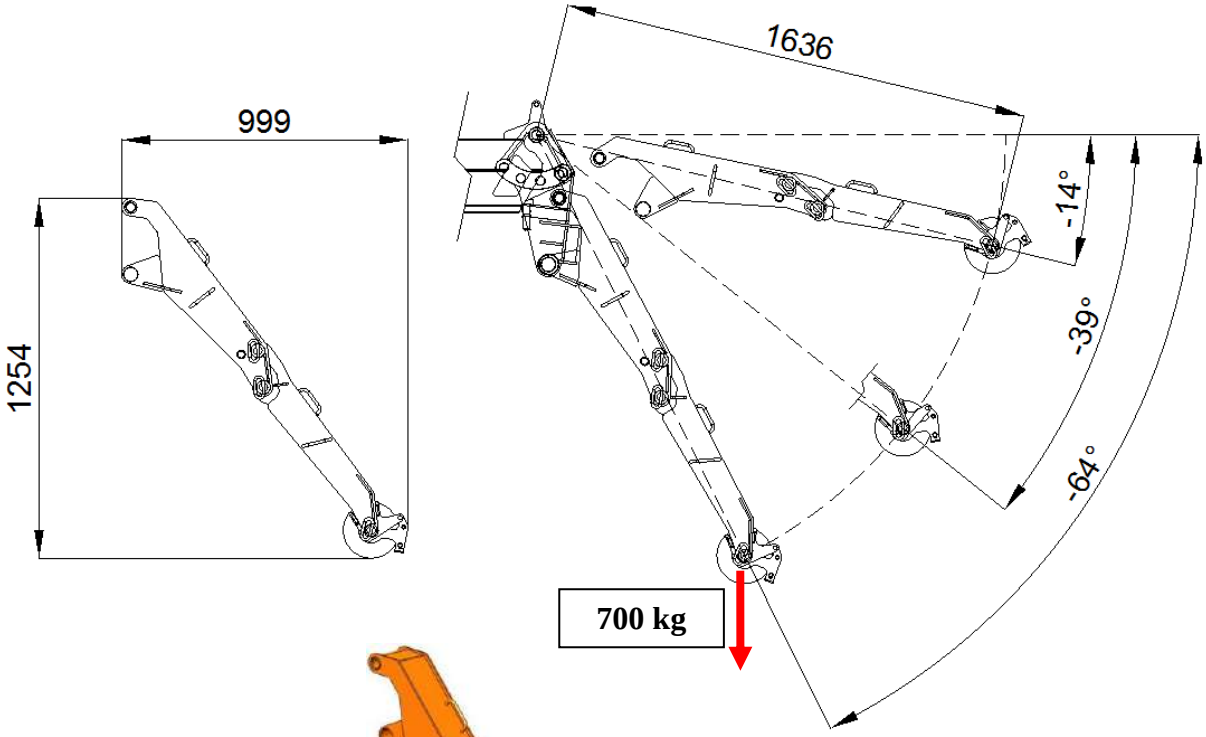

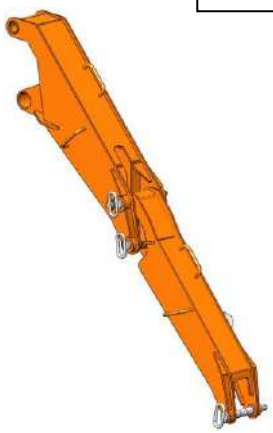

	kg
	30+20

SYMBOLS

Weight	Chart Wheels	Engine	Jib lenght and angle
Counterweight	Minipicker	Diesel Fuel	Jib Lenght
Crane	Back Wheel Point Loading	Gasoline Fuel	Jib Radius
Travel Speed	Front wheel Point Loading	Tank	Hydraulic Jib Lenght
Gradeability	Travel Speed	Battery	Hydraulic Jib Radius
Outtrigger Load	Gradeability	Power	Mechanical Jib Lenght
Track Loading	Working Radius	Boom Angle	Mechanical Jib Radius
Outtriggers Setup	Hookblock	Boom Lenght	Manipulator Lenght
Ext Tracks Width	Slewing	Boom Radius	Manipulator Radius
Chart On Tracks	Slewing Locked	Jib Hook Radius	Maximum inclination of the machinery
Jib on board	Without jib on board	Standard	Stabilizing bar
Horizontal boom angle	Number of vacuum pads	Factory max. load	Building site max. load

Remarks referring to load chart

- The load charts are calculated according to EN 13000.
- For the calculation of the load charts at least a wind speed of 9m/s (33km/h) and regarding the load a sail area of 1m² per ton load and a wind resistance coefficient of 1.2 on the load have been taken into account. For lifting of loads with large sail areas and/or high wind resistance coefficients the maximum wind speed as stated in the load charts has to be reduced.
- Lifting capacities are given in kilograms.
- The weight of the hook blocks and hooks is part of the load and therefore it must be deducted from the lifting capacities.
- Working radii are mesured from the slewing centre.
- The lifting capacities given for the telescopic boom apply if the folding jib is removed.
- Subject to modification of lifting capacities.

NOTES

NOTES

NOTES

NOTES

DEALER

JEKKO S.r.l. via Campardone, 1 Z.I. 31014 Colle Umberto (TV)
Italy tel. +39 0438 1710083 fax +39 0438 1710123
www.jekko.it - info@jekko.it